TECHNICAL DATA

Three Phase Electric Motors - Cast Iron Frame
PE30 315L1-8
90 kW / 125 Cv
735 RPM

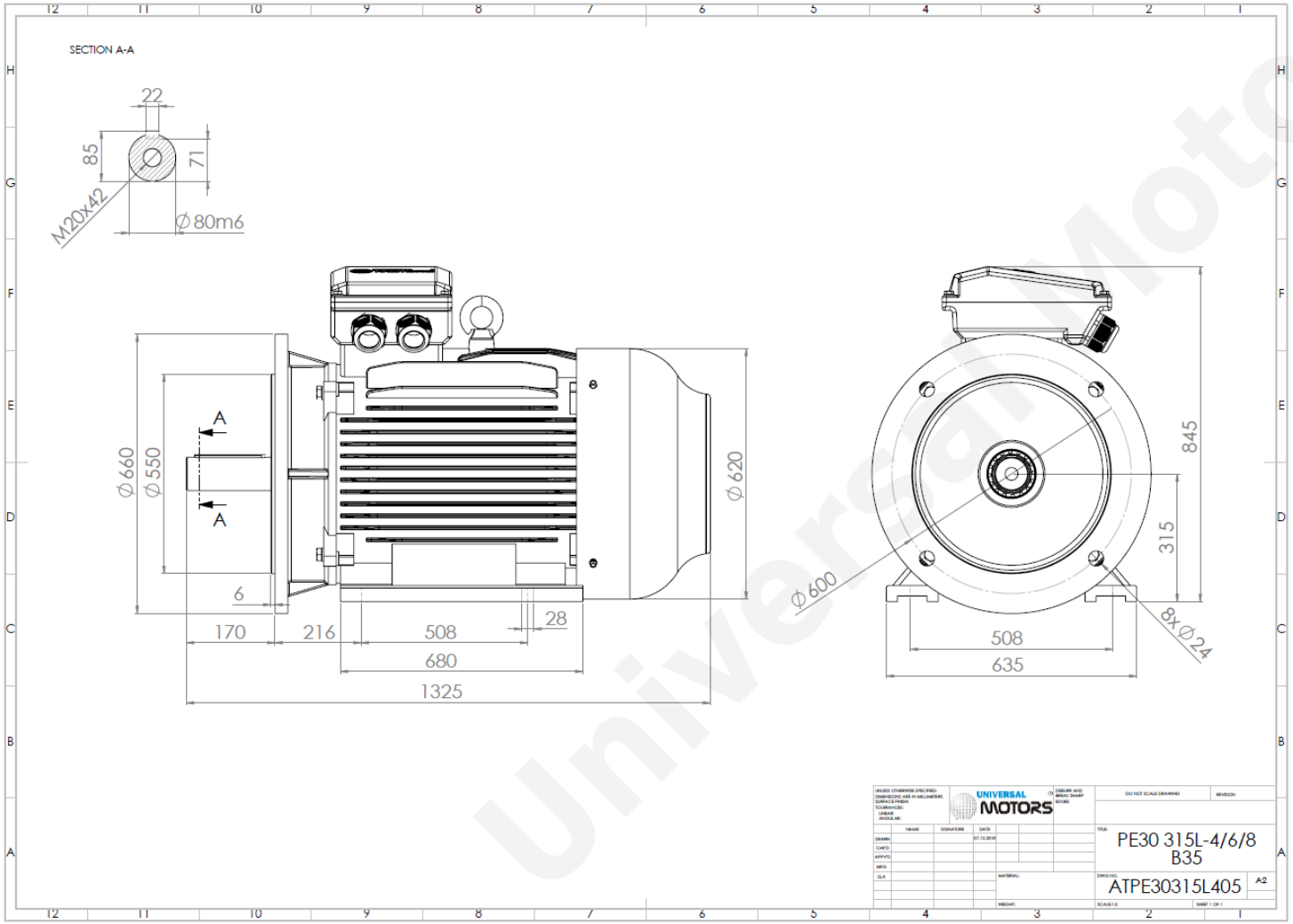

Motor type:	**PE30 315L1-8**
Output:	**90 kW / 125 Cv**
Speed (min^{-1}):	**735 RPM**
Frequency:	**50 Hz**
Voltage:	**400 V**
Current:	**169.6 A**
Power factor (Cos Ø):	**0.82**
Poles:	**8**
Insulation class:	**F**
Temperature rise Class:	**B**
Efficiency 50%:	**92.0 %**
Efficiency 75%:	**93.5 %**
Efficiency 100%:	**93.4 %**
Torque:	**1167 N.m**
Tstarting/Tnominal:	**1.8**
Istarting/Inominal:	**6.4**
Tmaximum/Tnominal:	**2.0**
Noise:	**82 Db(A)**
Weight:	**1182 Kg**
Bearing DE:	**NU 319**
Bearing NDE:	**6319 C3**

Regime - S1 **Altitude - 1000m** **Environment Temperature - 40ºC**

* References applied only in the UK

CONTACTS:

UNIVERSAL MOTORS
Rua de São Brás,745
4480-782 VILA DO CONDE

Tel: +351 252 299 080
Fax: +351 252 299 089
Mail: geral@universalmotors.pt

Universal Motors